NATIVE TRAILS

SPECIFICATIONS

PALISADES

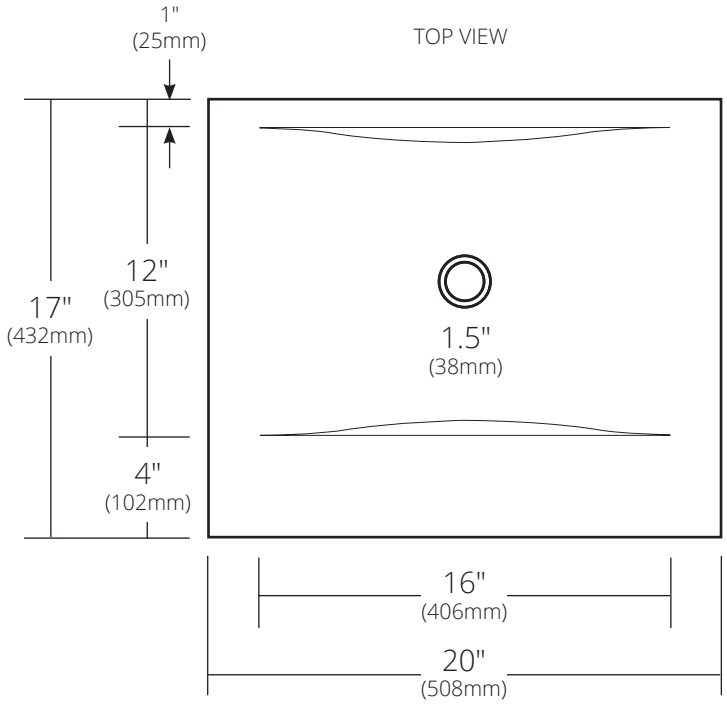

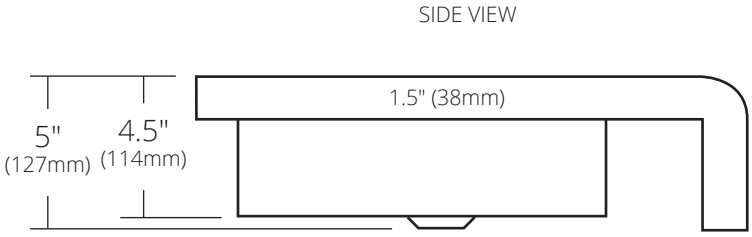

CPS241 Antique
CPS541 Brushed Nickel

PRODUCT DETAILS

- 20" x 17" x 5" OD (508mm x 432mm x 127mm)
- 16" x 12" x 4.5" ID (406mm x 305mm x 114mm)
- Hand hammered 16 gauge recycled copper
- 1.5" (38mm) drain opening

INSTALLATION

- Drop-in

COORDINATING PRODUCTS

- Drains: DR120, DR130, DR150, or DR160
- MetalProtect™

STANDARDS COMPLIANCE

- UPC/cUPC compliant
- ADA COMPLIANT

IMPORTANT

Due to the handcrafted nature of this product, it will vary in finish, texture, hammering, and other details. Dimensions may vary up to ¼" (6mm). We strongly recommend waiting for the actual product before making any installation cuts.