NATIVE TRAILS

SPECIFICATIONS

CAZO

TOP VIEW

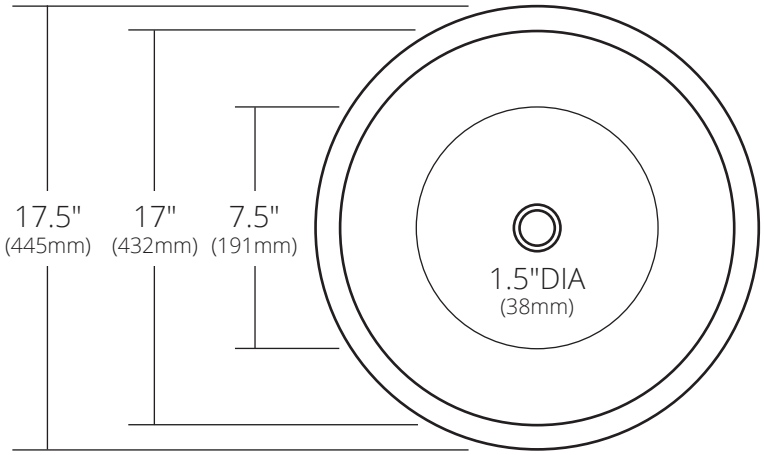

SIDE VIEW

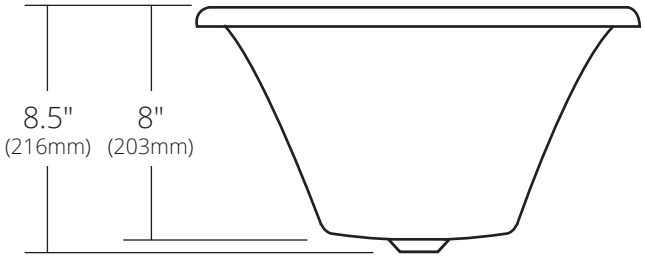

CPS258 Antique
CPS558 Brushed Nickel

PRODUCT DETAILS

- 17.5" x 8.5" OD (445mm x 216mm)
- 17" x 8" ID (432mm x 203mm)
- Hand hammered 16 gauge recycled copper
- 1.5" (38mm) drain opening

INSTALLATION

- Drop-in or Vessel

COORDINATING PRODUCTS

- Drains : DR120, DR130, DR150 or DR160
- MetalProtect™

STANDARDS COMPLIANCE

- UPC/cUPC compliant

IMPORTANT

Due to the handcrafted nature of this product, it will vary in finish, texture, hammering, and other details. Dimensions may vary up to ¼" (6mm). We strongly recommend waiting for the actual product before making any installation cuts.